GF COUPLINGS with POLYAMIDE SLEEVE

SERIES GF



GF COUPLINGS
with POLYAMIDE SLEEVE

PRESENTATION

The GIFLEX range of flexible toothed couplings are commercial couplings for general applications, which are however manufactured to a high quality standard and offer technical and performance features that are typical of industrial couplings. The specific application sector refers to power transmissions for the flexible connection of rotating parts, with the possibility of compensating radial and angular misalignments and absorbing axial slippage.
The performance is in line with this class of couplings, rendered more demanding and better suited to the needs of industrial requirements by the design criteria adopted and the precision with which the couplings are machined and systematically tested.

CONSTRUCTION

In structural terms, the flexible toothed couplings consist of two symmetrical steel hubs and a synthetic resin sleeve, which ensures the coupling and power transmission between the two hubs.
The two hubs are manufactured from low carbon content steel and have been subjected to anti-corrosion surface treatment and are each fitted with a toothed ring.
The hollow sleeve with internal toothing formed by injection moulding comprises a high molecular weight semi-crystalline technical polymer, guaranteed by certification at origin, thermally conditioned and charged with a solid lubricant that contributes to enhance the self-lubricating features typical of the polymer. The toothing of the two hubs has a progressive dual curvature, produced using a Numerically Controlled machine tool, which ensures the coupling provides optimum performance. This solution enables dynamic type angular and radial misalignments to be compensated ALSO UNDER LOAD CONDITIONS. The specific geometry of the tooth for a given transmitted twisting moment significantly reduces the surface pressure, thereby increasing the coupling's capacity to transmit the load and fatigue resistance.
The polymer's relative insensitivity to atmospheric humidity and its capacity to withstand temperatures between –20° and + 120° with brief peaks of up to +150° enable the coupling to withstand demanding working conditions also in an aggressive environment.

CHARACTERISTICS

The couplings provide the following performance in practical applications:
- Reduced overall dimensions, weight and inertia moment;
- Constant velocity behaviour at speed;
- Silent operation and the ability to absorb impacts and vibrations flexibly;
- Withstand the most common aggressive chemical agents and moderate heat, max. temp. 80°;
- Self-lubricating, electrically insulated and maintenance-free;
- Inexpensive, easily assembled and are suited to a variety of applications, also in demanding conditions.

TIPOLOGY of HUBS for SERIES **GF**



NORMAL HUB



LONG HUB



SLEEVE

COUPLING SELECTION

Torque based selection:
the coupling must be selected so that the max motor torque does not exceed the coupling's per-mitted peak twisting moment.

ASSEMBLY GUIDELINES

(a) Position the two semi-couplings on the shafts, taking care that the internal surfaces are in line with the shaft ends.
(b) Insert the sleeve on the two semi-couplings adjusting their distance (distance "G"), while the two shafts are aligned at the same time.
(c) Clamp the two parts to be coupled together in position.
(d) Check that the sleeve is free to move in an axial direction before the coupling is rotated.

Aligned Shafts	Radially displaced shafts	Angularly displaced shafts	Radially and angularly displaced shafts

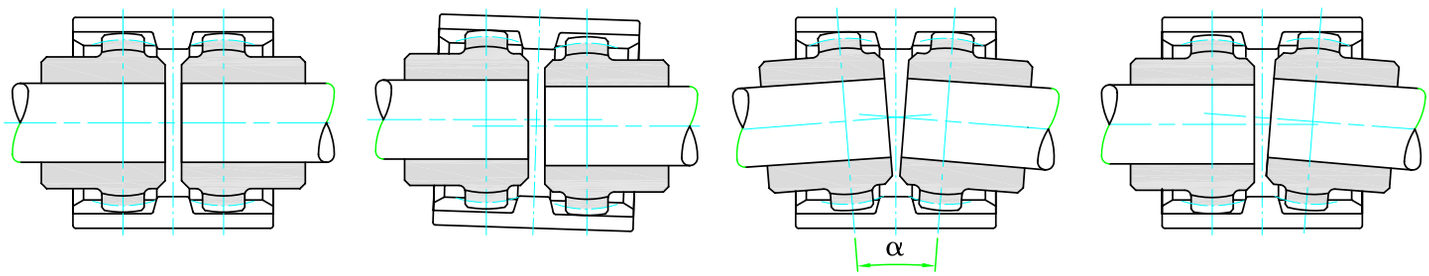

TECHNICAL DATA

COUPLING TYPE	Power factor Kw r.p.m.		Torque Nm		power transmitted in kw at r.p.m. 750		1000		1500		3000		r.p.m.	mass	J	Maximum misalignement for each hub Angular	Radial	Axial displacement
	norm	max	norm	max	norm	max	norm	max	norm	max	norm	max	max	kg	kg cm²	a	mm	mm
GF 14	0,0011	0,0023	11,5	23	0,8	1,5	1,1	2,0	1,6	3,0	3,3	6,0	14.000	0,166	0,27	± 2°	0,7	± 1
GF 19	0,0019	0,0037	18,5	36,5	1,3	2,7	1,8	3,7	2,7	5,5	5,4	11,1	12.000	0,276	0,64	± 2°	0,8	± 1
GF 24	0,0023	0,0047	23	46	1,7	3,5	2,3	4,7	3,4	7,0	6,9	14,1	10.000	0,312	0,92	± 2°	0,8	± 1
GF 28	0,0053	0,0106	51,5	103,5	3,9	7,9	5,2	10,6	7,8	15,9	15,6	31,8	8.000	0,779	3,45	± 2°	1,0	± 1
GF 32	0,0071	0,0142	69	138	5,2	10,5	7,0	14,1	10,5	21,1	21,0	42,3	7.100	0,918	5,03	± 2°	1,0	± 1
GF 38	0,0090	0,0181	88	176	6,7	13,5	9,0	18,0	13,5	27,0	27,0	54,0	6.300	1,278	9,59	± 2°	0,9	± 1
GF 42	0,0113	0,0226	110	220	8,4	16,8	11,2	22,5	16,8	33,7	33,6	67,5	6.000	1,473	13,06	± 2°	0,9	± 1
GF 48	0,0158	0,0317	154	308	11,8	23,6	15,8	31,6	23,7	47,4	47,4	94,8	5.600	1,777	18,15	± 2°	0,9	± 1
GF 55	0,029	0,058	285	570	21,7	43,5	29,0	58,0	43,5	87,0	87,0	174,0	4.800	3,380	49,44	± 2°	1,2	± 1
GF 65	0,0432	0,0865	420	840	32,1	64,3	42,9	85,8	64,3	128,7	128,7	257,4	4.000	4,988	106,34	± 2°	1,3	± 1

J inertia moment HUB A+B
with bore Ø max

CAD drawings available on our site
www.chiaravalli.com

Quantity, availability and prices on B2B Chiaravalli

POLYAMIDE SLEEVE

INTERPRETATION CODES

EXAMPLE

GF 14-NN with 2 normal hubs

GF 14-NL with 1 normal hubs and 1 long hub

GF 14-LL with 2 long hubs

The characteristic size of the coupling is defined by the maximum diameter bore.

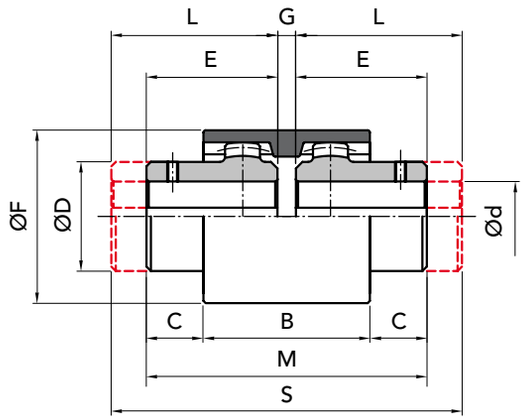

	PART NUMBERS FOR COMPLETE COUPLING			PART NUMBERS FOR SIMPLE COMPONENTS		
COUPLING TYPE	P. NUMBER GF NN	P. NUMBER GF NL	P. NUMBER GF LL	HUB NORMAL	HUB LONG	Sleeve NYLON
GF 14	00101402	00101400	00101404	00101420	00101440	00101410
GF 19	00101902	00101900	00101904	00101920	00101940	00101910
GF 24	00102402	00102400	00102404	00102420	00102440	00102410
GF 28	00102802	00102800	00102804	00102820	00102840	00102810
GF 32	00103202	00103200	00103204	00103220	00103240	00103210
GF 38	00103802	00103800	00103804	00103820	00103840	00103810
GF 42	00104202	00104200	00104204	00104220	00104240	00104210
GF 48	00104802	00104800	00104804	00104820	00104840	00104810
GF 55	00105502	00105500	00105504	00105520	00105540	00105510
GF 65	00106502	00106500	00106504	00106520	00106540	00106510

MEASUREMENTS - WEIGHTS

COUPLING TYPE	without bore	Ød avalaible holes with H7 tollerance ON REQUEST		measurement in mm for normal range hubs							long hubs series		Kg		
		min	max	B	C	ØD	E	ØF	G	M	L	S	sleeve	HUB normal	HUB long
GF 14	-	6	14	38	6,5	25	23,5	41	4	51	30	64	0,022	0,10	0,13
GF 19	-	8	19	38	8,5	32	25,5	48	4	55	40	84	0,028	0,18	0,28
GF 24	-	10	24	42	7,5	36	26,5	52	4	57	50	104	0,037	0,23	0,42
GF 28	-	10	28	48	19	45	41	68	4	86	60	124	0,086	0,54	0,79
GF 32	-	12	32	48	18	50	40	75	4	84	60	124	0,104	0,66	0,97
GF 38	-	14	38	50	17	58	40	85	4	84	80	164	0,131	0,93	1,83
GF 42	-	20	42	50	19	63	42	95	4	88	110	224	0,187	1,10	2,76
GF 48	-	20	48	50	27	68	50	100	4	104	110	224	0,198	1,50	3,21
GF 55	-	25	55	65	29,5	82	60	120	4	124	110	224	0,357	2,63	5,12
GF 65	-	25	65	72	36	95	70	140	4	144	140	284	0,595	4,02	7,90

GF **NN** GF **NL** GF **LL**

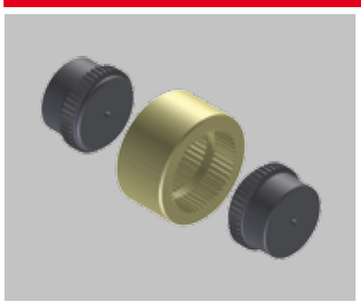

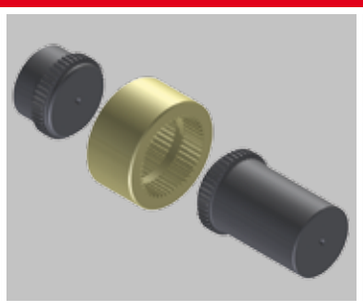





IMPORTANT
The GF couplings can be ordered complete or for single items.



CAD drawings available on our site
www.chiaravalli.com

Quantity, availability and prices on B2B Chiaravalli

SERIES GFA



GFA COUPLING with Steel Sleeve

PRESENTATION

The **"GIFLEX®" GFA** range of flexible couplings represent couplings designed with a compact structure for industrial applications, torsionally rigid and capable of compensating angular, parallel and combined misalignments.
The special configuration with the single-piece sleeve and the seals at the two ends renders the couplings suitable for use in aggressive environments and in particularly demanding operating conditions. The performance complies with the characteristics of a dual articulation, constant-velocity coupling intended to be used both for general and specific applications and with the possibility of also being mounted on shafts with a large free gap.
The operating limits defined by the maximum torque, by the rotating speed and the permitted angular misalignment are the result of a design based on a targeted choice of materials, the heat treatment and the toothing geometry.
The reliability of the stated operating limits has been confirmed by testing the fatigue limits both at the surface pressure (Hertzian pressure) and at bending and to destructive wear in accordance with calculation schemes based on the most authoritative international standards.
The CHIARAVALLI GROUP SpA Technical Department is available however, to examine problems that relate to the choice, application and maintenance of couplings in collaboration with users.

On specific request, special couplings by their shape, execution and performance can be offered and produced, as an alternative to the normal execution couplings.
For example:
- Couplings designed for high angular and parallel misalignments.
- Couplings manufactured using high resistance steel and with surface hardening heat treatment.
- Couplings with case hardened and hardened hubs and using a hard metal tool).
- Special couplings manufactured to a drawing.

STRUCTURAL CHARACTERISTICS

The **GFA** range of compact couplings, comprise two toothed hubs and an external connecting single-piece sleeve.
The lubricant seal inside the coupling is ensured by two ring gaskets, arranged at the two ends of the sleeve and held in position by spring washers (Seeger washers).
Two threaded dowels arranged radially on the sleeve in a counter-position allow a solid lubricant to be adopted.
The toothing adopted for the two hubs is profile corrected and has a progressive dual curvature achieved by machine the toothing on a fully Numerically Controlled gear cutting machine.
The sleeve's profile corrected toothing, which has a parallel gene-ratrix, is obtained using a shaping tool.
The toothing is produced to category 7 precision, in compliance with DIN 3972 and has a degree of finish with a surface roughness of not more than Ra = 1.4 micrometres, thanks to the machining technology adopted.
Both the hubs and the sleeve are manufactured using hardened and tempered carbon steel with a tensile stress resistance of 800 N/mm. The couplings are subjected to a surface hardening thermo-chemical treatment at the end of the machining stage, which ensures a high resistance to wear and seizure and also confers a high resistance to corrosion caused by atmospheric agents.
The perfect seal achieved by the gaskets ensures the required lubricant containment and prevents penetration of contaminating elements from outside, thereby contributing to increase the average useful working life of the coupling, even if operating in an aggressive environment.
The two toothed hub bands are positioned at the maximum distance permitted by the sleeve length. This arrangement ensures a minimum angular misalignment for a given parallel misalignment and enhances the coupling's constant-velocity features.

CHIARAVALLI GROUP BRAND **GIFLEX®**
GFA COUPLING SELECTION AND SIZING CRITERIA

The satisfactory operation and the useful working life of flexible toothed couplings depends on the correct selection of the couplings, as well as on the compatibility of the operating conditions with the performance provided by the coupling. It is essential therefore, to highlight the limiting performance of the couplings and to clarify the actions of the external loads that are exerted on the corresponding couplings.
The basic design ensures that all the couplings are capable of compensating a static angular or assembly misalignment equal to 1 degree and this is ensured by the minimum construction tolerance between the teeth.
The dynamic angular or operating misalignment must never be greater than 0.5 degrees, even if the recommended values should not be greater than 0.25 degrees.
The declared nominal torque values and the maximum rotating speeds indicated refer to an angular or composite misalignment that does not exceed 1/12 of a degree (5 prime divisions).
The 'exceptional' torque values that can be supported as a transient and during the acceleration phases must not be exerted for more than 10-15 seconds and must not occur for more than 5 events/hour.
Fatigue durations are calculated for a conventional limit of 50 million cycles, considering two load cycles for each revolution of the coupling.
Misalignments exceeding 1/8 degrees (7.5 prime divisions) penalise by decreasing the nominal torque and the maximum rotating speed declared for the individual couplings.
The performance of the coupling in terms of torque, limiting speed and useful working life will decrease or increase compared with the declared values in the case of operating conditions that differ from the conditions specified above or for "fixed-term" durations.
The design data has been tested for the purpose of ensuring a reasonable safety margin. The declared performance therefore, is to be understood as valid for a Service Factor equal to 1.
Use of the prescribed lubricants and compliance with the recommended restore time intervals represent the preconditions to achieve the performance as described
in the catalogue. The CHIARAVALLI GROUP SpA Technical Department is available to advise users in selecting the type of coupling most appropriate for the actual operating conditions and to make recommendations in relation to special operating conditions.

TECHNICAL DATA

COUPLING TYPE	Power Factor Kw r.p.m.		Torque Kw		Power transmitted in Kw at r.p.m.				r.p.m.	r.p.m. recommended limit	max radial misalignment	mass	J
					750	1000	1500	3000					
	normal	except.	normal	except.	normal	normal	normal	normal	max		mm	kg	kg cm²
GFA 25	0,061	0,157	600	1.524	45	61	91	183	6.000	5.000	0,20	1,36	8,68
GFA 32	0,103	0,259	1.000	2.520	77	103	154	309	5.000	4.000	0,26	2,51	25,10
GFA 40	0,128	0,322	1.250	3.125	96	128	192	384	4.200	3.000	0,32	3,55	44,82
GFA 56	0,257	0,639	2.500	6.200	192	257	385	-	3.500	2.200	0,37	6,15	132,60
GFA 63	0,412	0,985	4.000	9.260	309	412	618	-	3.000	1.600	0,40	9,91	278,20
GFA 80	0,773	1,855	7.500	18.000	579	773	-	-	2.600	1.200	0,48	16,20	558,6
GFA 100	1,236	2,937	12.000	28.500	927	-	-	-	1.400	700	0,65	23,00	1.044,50
GFA 125	2,431	5,795	23.600	56.250	1.823	-	-	-	950	460	0,70	49,15	3.650
GFA 155	4,121	9,273	40.000	90.000	3.090	-	-	-	700	350	0,80	91,30	9.982

N.B. Class G 2.5 dynamic balancing in compliance with ISO 1940 is recommended for actual operating speeds that exceed 3,600 r.p.m.
Couplings can operate with a parallel misalignment value that is double the suggested value and assembly with a misalignment value that is four times greater than the suggested value in exceptional cases.

(1) Referred to the normal coupling complete with maximum bore without keyway.

CAD drawings available on our site
www.chiaravalli.com

Quantity, availability and prices on B2B Chiaravalli

The torque, speed and useful working life data declared for the couplings are to be understood as valid referred to a Service Factor SF = 1.
The service factor must be determined therefore, based on the type of load, the load intensity and the range factor that characterises the type of load exerted on the coupling.
The values shown in the following table can be considered as a precautionary measure in the absence of reliable service factor design data.

LOAD CONDITION	OPERATING CONDITIONS	TYPE OF DRIVE	
		electric motor	diesel engine
UNIFORM	Regular operation without impacts or overloads	1,25	1,5
LIGHT	Regular operation with minor and infrequen impacts and overloads	1,50	2,0
MEDIUM	Irregular operation with medium overloads for a short duration and frequent but moderate impacts	2,0	2,5
HEAVY	Markedly irregular operation with very frequent impacts and overloads and of major intensity.	2,5	3,0

TEST BASED ON THE POWER TO BE TRANSMITTED

Use the following formula to calculate the value of the operating torque (Me) expressed in Nm, considering the drive motor power output (P) in kW and the operating speed (n) in r.p.m.

$$Me = \frac{9549 \times P}{n}$$

Establish the nominal torque to be transmitted (Mn) based on the service factor taken from the table.

$$Mn = Me \times FS$$

Select the coupling with a nominal torque which is GREATER than the value calculated.

WARNING
The declared nominal torques must be progressively decreased for angular misalignments that exceed 0.125 degrees.

TEST BASED ON THE SHAFT DIAMETER

Check that the largest of the shafts to be connected has a diameter equal to or less than the nominal bore declared for the coupling.

The maximum permitted diameter for the selected coupling should be limited to UNIFORM or LIGHT load conditions.

CHIARAVALLI GROUP BRAND **GIFLEX®**
COUPLING SIZE SELECTION INSTRUCTIONS

TEST BASED ON THE ROTATING SPEED

The maximum rotating speed indicated for each coupling represents an operating limit calculated for an angular misalignment that does not exceed 1/12 of a degree. Both the nominal torque and the permitted rotating speed are reduced for greater angular misalignments. Adopt a coefficient equal to 1.12 to increase the service factor and select the coupling as described previously when both the misalignment and the operating speed are less than the suggested reference values, but are close to these values. Contact our Technical Services for operating conditions with misalignments and operating speeds that exceed the suggested reference values.

TEST BASED ON THE REQUIRED USEFUL WORKING LIFE

Nominal operating conditions (torque, misalignment and rotating speed). Operating lifespans that exceed the standard duration cause the nominal torque to decrease.
The service factor must be multiplied by a lifespan coefficient defined as follows if a given operating lifespan, which exceeds the standard working lifespan, is required.

OPERATING LIFESPAN IN HOURS	3800	4000	6000	8000	12000	20000
LIFESPAN COEFFICIENT	1	1,06	1,17	1,26	1,39	1,58

The nominal torque verified for the lifespan must be further decreased in the fairly improbable circumstance in which the actual operating speed is greater than the maximum permitted operating speed for the misalignment conditions of the coupling when in operation.

COMPONENT PARTS OF THE "GIFLEX®" GFA COUPLING

COUPLING TYPE	POS. 1 description	N° of pieces	POS.2 description	N° of pieces	POS.3 Seal ring Corteco NBR DIN 3760 A	N° of pieces	POS.4 Flexible ring for bores DIN 472	N° of pieces	POS.5 Flat dowel UNI 5923	N° of pieces	Allen wrench	N° of pieces
GFA 25	sleeve	1	HUB	2	BA 42x56x7	2	56 I	2	M 6x8	2	D.3	1
GFA 32	sleeve	1	HUB	2	BA 56x72x8	2	72 I	2	M 6x8	2	D.3	1
GFA 40	sleeve	1	HUB	2	BA 64x80x8	2	80 I	2	M 6x8	2	D.3	1
GFA 56	sleeve	1	HUB	2	BA 80x100x10	2	100 I	2	M 6x8	2	D.3	1
GFA 63	sleeve	1	HUB	2	BA 100x125x12	2	125 I	2	M 6x8	2	D.3	1
GFA 80	sleeve	1	HUB	2	BA 125x160x12	2	160 I	2	M 6x8	2	D.3	1
GFA 100	sleeve	1	HUB	2	SMIM 150x180x12	2	180 I	2	M 6x8	2	D.3	1
GFA 125	sleeve	1	HUB	2	SM 190x220x15	2	220 I	2	M 6x8	2	D.3	1
GFA 155	sleeve	1	HUB	2	SMIM 240x280x15	2	280 I	2	M 6x8	2	D.3	1

COMPONENT PARTS OF THE "GIFLEX®" GFA COUPLING

COUPLING TYPE	POS. 1 description	N° of pieces	POS.2 description	N° of pieces	POS.3 Seal ring Serie UM Gaco NBR	N° of pieces	POS.4 Flexible ring for bores DIN 471	N° of pieces	POS.5 Flat dowel UNI 5923	N° of pieces	Allen wrench	N° of pieces
GFAS 25	sleeve	1	HUB	1	UM 60x40x10	1	40 E	1	M 6x8	2	D.3	1
GFAS 32	sleeve	1	HUB	1	UM 75x55x10	1	55 E	1	M 6x8	2	D.3	1
GFAS 40	sleeve	1	HUB	1	UM 85x65x10	1	65 E	1	M 6x8	2	D.3	1
GFAS 56	sleeve	1	HUB	1	UM 100x80x10	1	80 E	1	M 6x8	2	D.3	1
GFAS 63	sleeve	1	HUB	1	UM 120x100x10	1	100 E	1	M 6x8	2	D.3	1
GFAS 80	sleeve	1	HUB	1	UM 155x125x15	1	125 E	1	M 6x8	2	D.3	1
GFAS 100	sleeve	1	HUB	1	UM 180x150x15	1	150 E	1	M 6x8	2	D.3	1



NORMAL HUB



LONG HUB



SLEEVE STEEL

ASSEMBLY INSTRUCTIONS

GFA ASSEMBLY

A) Insert the stop ring (4) and the seal ring (2) on the shaft.
B) Assemble the hubs (2) on the relative shafts.
C) Sleeve (1) is to be fitted on the longest shaft.
D) Position the shafts close together and check that the distance G corresponds to the value indicated in the table.
E) Align the shafts and check the parallelism then tighten the hubs on the shaft.
F) Fill the toothing and the gap between the hubs with grease.
G) At this stage slide the sleeve (1) down and position the sealing rings (3) in its place and tighten the stop rings (4) in their seat.
H) Proceed as follows for disassembly: remove the stop rings (4) using a pair of pliers, separate the sleeve (1) from the hubs (2) and the GFA coupling is fully disassembled.

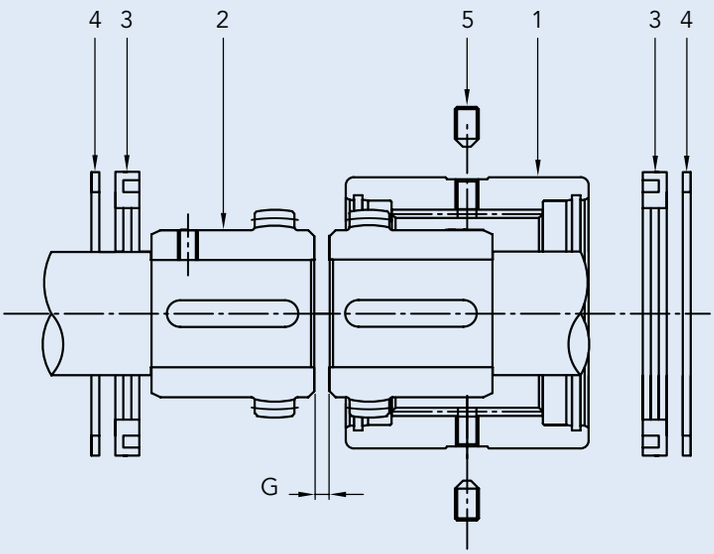

MAINTENANCE

Unscrew both plugs (5) then introduce grease using the grease gun through the greasing holes until the grease exits from the other hole positioned at 180°. Replace the plugs.
Repeat this operation every 1.000 working hours.

Equivalent recommended greases are as follows:

TYPE	PRODUCER
Sovarex L-O	MOBIL OIL
Gulfrown EP-O	GULF OIL
Alesia EP-2	SHELL OIL
....	....

Couplings require lubrication with grease, the quantity of grease used should half fill the available gap.

Use of Lithium soap grease with a base mineral oil and consistency index 2 (in compliance with NLGI) is recommended for moderate loads and normal operating conditions.

Use Barium complex soap grease, PAO synthetic base oil and consistency index 2 for heavy-duty operating conditions as regards temperatures and with heavy loads.

Contact the CHIARAVALLI GROUP SpA Technical Department for extreme operating conditions.

The lubricant complying with the formulation and with the recommended characteristics can be selected from among the range of products indicated below by consulting the Producer.

N.B.
The technical characteristics, the dimensions and all other data contained in this catalogue are not bin ding.
CHIARAVALLI GROUP SpA reserves the right to change the measurements indicated at any time and without notice.

STEEL SLEEVE

INTERPRETATION CODES

EXAMPLE

GFA 25-NN with 2 normal hubs
GFA 25-NL with 1 normal hubs and 1 long hub
GFA 25-LL with 2 long hubs

The characteristic size of the coupling is defined by the maximum diameter bore.

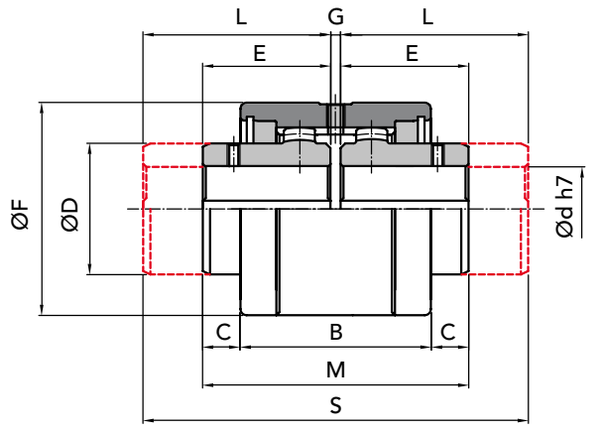

COUPLING TYPE	P. NUMBER GFA NN	P. NUMBER GFA NL	P. NUMBER GFA LL	SLEEVE	HUB NORMAL	HUB LONG	COMPONENTS to assembled coupling
	PART NUMBERS FOR COMPLETE COUPLING			PART NUMBERS FOR SIMPLE COMPONENTS			
GFA 25	00202502	00202500	00202504	00202510	00202520	00202540	00202560
GFA 32	00203202	00203200	00203204	00203210	00203220	00203240	00203260
GFA 40	00204002	00204000	00204004	00204010	00204020	00204040	00204060
GFA 56	00205602	00205600	00205604	00205610	00205620	00205640	00205660
GFA 63	00206302	00206300	00206304	00206310	00206320	00206340	00206360
GFA 80	00208002	00208000	00208004	00208010	00208020	00208040	00208060
GFA 100	00210002	00210000	00210004	00210010	00210020	00210040	00210060
GFA 125	00212502	00212500	00212504	00212510	00212520	00212540	00212560
GFA 155	00215502	00215502	00215504	00215510	00215520	00215540	00215560

MEASUREMENTS - WEIGHTS

COUPLING TYPE	Ø bore nom.	Ød avalaible holes with H7 tollerance ON REQUEST min	max	measures in mm normal series B	C	ØD	E	ØF	G	M	long series L	S	Kg sleeve	HUB normal	HUB long
GFA 25	-	25	28	61	12	42	41	68	3	85	60	123	0,72	0,48	0,69
GFA 32	-	32	38	73	13,5	55	48,5	85	3	100	80	163	1,14	0,99	1,58
GFA 40	-	40	48	82	16,5	64	56	95	3	115	80	163	1,68	1,49	2,10
GFA 56	-	56	60	97	21,5	80	68	120	4	140	100	204	2,86	2,96	4,22
GFA 63	-	63	70	108	22,5	100	74,5	140	4	153	119,5	243	3,75	4,90	7,67
GFA 80	-	80	90	125	22,5	125	82,5	175	5	170	140	285	5,58	8,72	14,26
GFA 100	-	100	110	148	34	150	105	198	6	216	174,5	355	6,63	15,76	25,40
GFA 125*	40	125	140	214	39	190	140	245	8	288	207,5	423	17,70	32,60	49,50
GFA 155*	40	155	175	240	64	240	180	300	10	370	245	498	28,30	65,50	91,40

* Row material quenched steel 39NiCrMo3

GFA **NN** GFA **NL** GFA **LL**









On request: we execute machining for finish bore and keyway.

IMPORTANT
The GFA couplings can be ordered complete or for single items.

CAD drawings available on our site
www.chiaravalli.com



Quantity, availability and prices on B2B Chiaravalli

SERIES GFAS



GFAS COUPLING WITH STEEL BELL

PRESENTATION

The **"GIFLEX®" GFAS** range of flexible couplings represent couplings designed with a compact structure for industrial applications, torsionally rigid and capable of compensating angular, parallel and combined misalignments.
The special configuration with the single-piece sleeve and the seals at the two ends renders the couplings suitable for use in aggressive environments and in particularly demanding operating conditions. The performance complies with the characteristics of a dual articulation, constant-velocity coupling intended to be used both for general and specific applications and with the possibility of also being mounted on shafts with a large free gap.
The operating limits defined by the maximum torque, by the rotating speed and the permitted angular misalignment are the result of a design based on a targeted choice of materials, the heat treatment and the toothing geometry.
The reliability of the stated operating limits has been confirmed by testing the fatigue limits both at the surface pressure (Hertzian pressure) and at bending and to destructive wear in accordance with calculation schemes based on the most authoritative international standards.
The CHIARAVALLI GROUP SpA Technical Department is available however, to examine problems that relate to the choice, application and maintenance of couplings in collaboration with users.

On specific request, special couplings by their shape, execution and performance can be offered and produced, as an alternative to the normal execution couplings. For example:
- Couplings designed for high angular and parallel misalignments.
- Couplings manufactured using high resistance steel and with surface hardening heat treatment.
- Couplings with case hardened and hardened hubs and toothing finished by machine tools after heat treatment (skiving using a hard metal tool).
- Special couplings manufactured to a drawing.

STRUCTURAL CHARACTERISTICS

The **GFAS** range of compact couplings, comprise two toothed hubs and an external connecting single-piece sleeve.
The lubricant seal inside the coupling is ensured by two ring gaskets, arranged at the two ends of the sleeve and held in position by spring washers (Seeger washers).
Two threaded dowels arranged radially on the sleeve in a counter-position allow a solid lubricant to be adopted.
The toothing adopted for the two hubs is profile corrected and has a progressive dual curvature achieved by machine the toothing on a fully Numerically Controlled gear cutting machine.
The sleeve's profile corrected toothing, which has a parallel generatrix, is obtained using a shaping tool.
The toothing is produced to category 7 precision, in compliance with DIN 3972 and has a degree of finish with a surface roughness of not more than Ra = 1.4 micrometres, thanks to the machi-ning technology adopted.
Both the hubs and the sleeve are manufactured using hardened and tempered carbon steel with a tensile stress resistance of 800 N/mm. The couplings are subjected to a surface hardening thermo-chemical treatment at the end of the machining stage, which ensures a high resistance to wear and seizure and also confers a high resistance to corrosion caused by atmospheric agents.
The perfect seal achieved by the gaskets ensures the required lubricant containment and prevents penetration of contaminating elements from outside, thereby contributing to increase the average useful working life of the coupling, even if operating in an aggressive environment.
The two toothed hub bands are positioned at the maximum distance permitted by the sleeve length. This arrangement ensures a minimum angular misalignment for a given parallel misalignment and enhances the coupling's constant-velocity features.

CHIARAVALLI GROUP BRAND **GIFLEX®**
GFAS COUPLINGS: SIZING AND SELECTION CRITERIA

The satisfactory operation and the useful working life of flexible toothed couplings depends on the correct selection of the couplings, as well as on the compatibility of the operating conditions with the performance provided by the coupling. It is essential therefore, to highlight the limiting performance of the couplings and to clarify the actions of the external loads that are exerted on the corresponding couplings.
The basic design ensures that all the couplings are capable of compensating a static angular or assembly misalignment equal to 1 degree and this is ensured by the minimum construction tolerance between the teeth.
The dynamic angular or operating misalignment must never be greater than 0.5 degrees, even if the recommended values should not be greater than 0.25 degrees.
The declared nominal torque values and the maximum rotating speeds indicated refer to an angular or composite misalignment that does not exceed 1/12 of a degree (5 prime divisions).
The 'exceptional' torque values that can be supported as a transient and during the acceleration phases must not be exerted for more than 10-15 seconds and must not occur for more than 5 events/hour.
Fatigue durations are calculated for a conventional limit of 50 million cycles, considering two load cycles for each revolution of the coupling.
Misalignments exceeding 1/8 degrees (7.5 prime divisions) penalise by decreasing the nominal torque and the maximum rotating speed declared for the individual couplings.
The performance of the coupling in terms of torque, limiting speed and useful working life will decrease or increase compared with the declared values in the case of operating conditions that differ from the conditions specified above or for "fixed-term" durations.
The design data has been tested for the purpose of ensuring a reasonable safety margin. The declared performance therefore, is to be understood as valid for a Service Factor equal to 1.
Use of the prescribed lubricants and compliance with the recommended restore time intervals represent the preconditions to achieve the performance as described
in the catalogue. The CHIARAVALLI GROUP SpA Technical Department is available to advise users in selecting the type of coupling most appropriate for the actual operating conditions and to make recommendations in relation to special operating conditions.

TECHNICAL DATA

COUPLING TYPE	Power Factor Kw r.p.m. normal	except.	Torque Kw normal	Nm except.	Power transmitted in Kw at r.p.m. 750 normal	1000 normal	1500 normal	3000 normal	r.p.m. max	r.p.m. recommended limit	max radial misalignment mm	mass kg	J kg cm²
GFAS 25	0,061	0,157	600	1.524	45	61	91	183	6.000	5.000	-	1,35	7,31
GFAS 32	0,103	0,259	1.000	2.520	77	103	154	309	5.000	4.000	-	2,43	19,15
GFAS 40	0,128	0,322	1.250	3.125	96	128	192	384	4.200	3.000	-	3,64	34,13
GFAS 56	0,257	0,639	2.500	6.200	192	257	385	-	3.500	2.200	-	6,07	96,56
GFAS 63	0,412	0,985	4.000	9.260	309	412	618	-	3.000	1.600	-	10,00	207,32
GFAS 80	0,773	1,855	7.500	18.000	579	773	-	-	2.600	1.200	-	19,18	492,6
GFAS 100	1,236	2,937	12.000	28.500	927	-	-	-	1.400	700	-	28,00	1.064,00

N.B. Class G 2.5 dynamic balancing in compliance with ISO 1940 is recommended for actual operating speeds that exceed 3,600 r.p.m.
Couplings can operate with a parallel misalignment value that is double the suggested value and assembly with a misalignment value that is four times greater than the suggested value in exceptional cases.

(1) Referred to the normal coupling complete with maximum bore without keyway.

CAD drawings available on our site
www.chiaravalli.com

Quantity, availability and prices on B2B Chiaravalli



NORMAL HUB



LONG HUB



NORMAL CONE



LONG CONE

GFAS ASSEMBLY

A) The seal ring (3) and stop ring (4) are already fitted on the extractable hub (2).

B) Assembly in closed cone mode only requires the sleeve (1) to be fixed onto one shaft and the extractable hub (2) to be tightened on the other shaft.

C) Then arrange the shafts to be connected closely to gether, positio ning the hub (2) over the sleeve (1).

D) To disassemble, separate the shafts then extract the hub (2) from the sleeve (1).

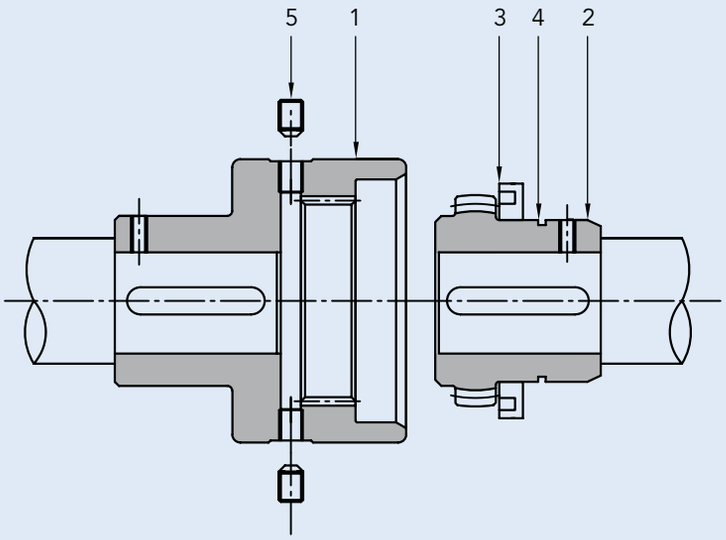

Equivalent recommended greases are as follows:

TYPE	PRODUCER
Sovarex L-O	MOBIL OIL
Gulfrown EP-O	GULF OIL
Alesia EP-2	SHELL OIL
....	....

Couplings require lubrication with grease, the quantity of grease used should half fill the available gap.

Use of Lithium soap grease with a base mineral oil and consistency index 2 (in compliance with NLGI) is recommended for moderate loads and normal operating conditions.

Use Barium complex soap grease, PAO synthetic base oil and consistency index 2 for heavy-duty operating conditions as regards temperatures and with heavy loads.

Contact the CHIARAVALLI GROUP SpA Technical Department for extreme operating conditions.

The lubricant complying with the formulation and with the recommended characteristics can be selected from among the range of products indicated below by consulting the Producer.

N.B.
The technical characteristics, the dimensions and all other data contained in this catalogue are not bin ding.
CHIARAVALLI GROUP SpA reserves the right to change the measurements indicated at any time and without notice.

CONE IN STEEL

INTERPRETATION CODES

Example
GFAS 25-NN with cone and a normal hub
GFAS 25-NL with cone and a long hub
GFAS 25-LL with long cone and a long hub
GFAS 25-LN with long cone and a normal hub

The characteristic size of the coupling is defined by the maximum diameter bore.

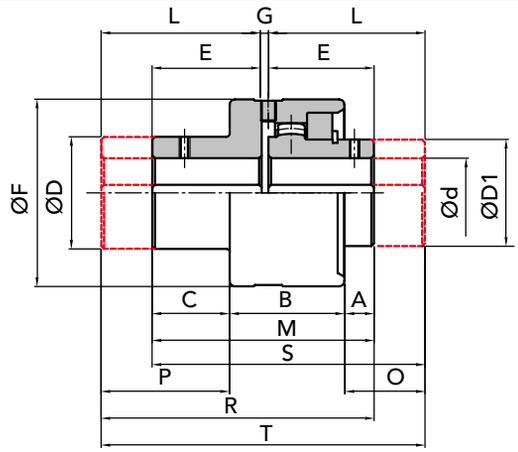

COUPLING TYPE	P.NUMBER GFAS NN	P.NUMBER GFAS NL	P.NUMBER GFAS LN	P.NUMBER GFAS LL	CONE NORMAL	CONE LONG	HUB NORMAL	HUB LONG	COMPONENTS to assembled coupling
	PART NUMBERS FOR COMPLETE COUPLING				PART NUMBERS FOR SIMPLE COMPONENTS				
GFAS 25	00302502	00302500	00302506	00302504	00302510	00302511	00302520	00302540	00302560
GFAS 32	00303202	00303200	00303206	00303204	00303210	00302511	00303220	00303240	00303260
GFAS 40	00304002	00304000	00304006	00304004	00304010	00304011	00304020	00304040	00304060
GFAS 56	00305602	00305600	00305606	00305604	00305610	00305611	00305620	00305640	00305660
GFAS 63	00306302	00306300	00306306	00306304	00306310	00306311	00306320	00306340	00306360
GFAS 80	00308002	00308000	00308006	00308004	00308010	00308011	00308020	00308040	00308060
GFAS 100	00310002	00310000	00310006	00310004	00310010	00310011	00310020	00310040	00310060

MEASUREMENTS - WEIGHTS

COUPLING TYPE	without bore	Ød finished bore		measures in mm																Kg			
				normal series										long series										
		min	max	A	B	C	ØD	ØD1	E	ØF	G	H	M	I	L	O	P	R	S	T	normal bell	normal HUB	long bell	long HUB
GFAS 25	-	25	28	13	43	29	42	40	41	70	3	41	85	60	60	32	48	104	104	123	1,03	0,48	1,30	0,69
GFAS 32	-	32	38	16	49	35	55	55	48,5	85	3	48,5	100	80	80	47,5	66,5	131,5	131,5	163	1,75	0,99	2,50	1,58
GFAS 40	-	40	48	18,5	54,5	42	64	64	56	95	3	56	115	80	80	42,5	66	139	139	163	2,71	1,49	3,40	2,10
GFAS 56	-	56	60	27	60	45	80	80	68	120	4	60	132	100	100	59	85	172	164	204	4,43	2,96	6,10	4,22
GFAS 63	-	63	75	31	63	46	100	100	74,5	140	4	61,5	140	119,5	119,5	76	104	198	185	243	6,62	4,90	10,20	7,67
GFAS 80	-	80	90	26	76	51	125	125	82,5	175	5	65,5	153	138	140	83,5	123,5	225,5	210,5	283	10,50	8,68	17,90	14,22
GFAS 100	-	100	110	38	92	71	150	150	105	198	6	90	201	162	174,5	107,5	143	273	270,5	342,5	28,2	15,70	38,1	25,30

GFAS **NN** GFAS **NL** GFAS **LL** GFAS **LN**







NORMAL HUB

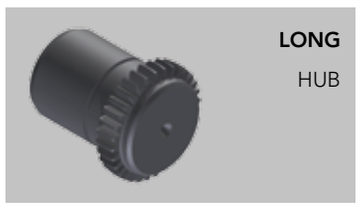
LONG HUB


NORMAL BELL


LONG BELL

IMPORTANT
The GFAS couplings can be ordered complete or for single items.



CAD drawings available on our site
www.chiaravalli.com

Quantity, availability and prices on B2B Chiaravalli

SERIES FBX



GIFLEX® **FBX** COUPLING WITH NYLON SLEEVE



NORMAL HUB



LONG HUB



NYLON SLEEVE

COUPLING SELECTION

Torque based selection:
the coupling must be selected in order that the maximum torque motor does not exceed the coupling's permitted twisting moment peak.

TECHNICAL DATA

COUPLING TYPE	Power factor Kw r.p.m.		Torque Nm		power transmitted in kw at r.p.m. 750		1000		1500		3000		r.p.m.	mass	J	Maximum misalignement for each hub Angular	Radial	Axial
	norm	max	norm	max	norm	max	norm	max	norm	max	norm	max	max	kg	kg cm²	a	mm	displacement mm
FBX 14	0,0010	0,0 020	10	20	0,80	1,56	1,05	2,10	1,58	3,14	3,12	6,24	14.000	0,12	0,27	± 2°	0,7	± 1
FBX 19	0,0017	0,0033	16	32	1,25	2,50	1,67	3,34	2,52	5,02	5,04	10,08	12.000	0,19	0,55	± 2°	0,8	± 1
FBX 24	0,0021	0,0042	20	40	1,58	3,15	2,10	4,20	3,14	6,28	6,26	12,52	10.500	0,23	0,96	± 2°	0,8	± 1
FBX 28	0,0047	0,0092	45	90	3,52	7,07	4,72	9,43	7,08	14,12	14,14	28,28	8.500	0,59	3,20	± 2°	1	± 1
FBX 32	0,0063	0,0127	60	120	4,70	9,43	6,28	12,58	9,40	18,85	18,83	37,66	7.500	0,78	5,60	± 2°	1	± 1
FBX 38	0,0084	0,0168	80	160	6,28	12,57	8,38	16,76	12,56	25,12	25,12	50,24	6.500	0,95	9,59	± 2°	0,9	± 1
FBX 42	0,0105	0,0210	100	200	7,85	15,72	10,47	20,93	15,70	31,40	31,42	62,84	6.000	1,32	13,90	± 2°	0,9	± 1
FBX 48	0,0147	0,0292	140	280	11,00	22,00	14,67	29,32	22,00	43,98	43,96	87,92	5.600	1,53	18,15	± 2°	0,9	± 1
FBX 55	0,0280	0,0565	275	555	20,80	39,50	27,80	52,00	42,50	85,00	84,60	169,20	4.800	2,30	49,44	± 2°	1,2	± 1
FBX 65	0,0398	0,0798	380	760	29,85	59,70	39,78	79,58	59,70	119,36	119,37	238,74	4.000	3,25	108,40	± 2°	1,3	± 1

CAD drawings available on our site
www.chiaravalli.com

Quantity, availability and prices on B2B Chiaravalli

NYLON SLEEVE

INTERPRETATION CODES

Example

FBX 19-NN with 2 normal hubs
FBX 19-NL with 1 normal hubs and 1 long hub
FBX 19-LL with 2 long hubs

The characteristic size of the coupling is defined by the maximum diameter bore.

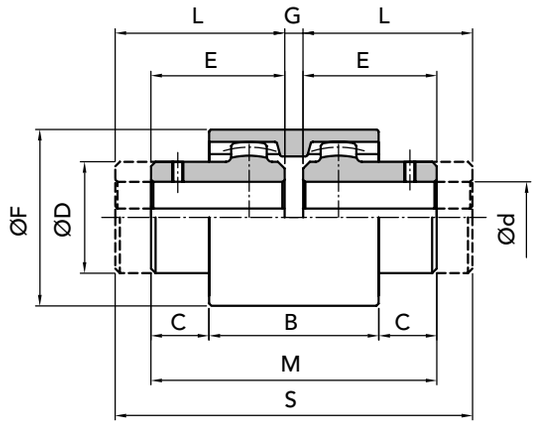

PART NUMBERS

COUPLING TYPE	PART NUMBER FBX NN	PART NUMBER FBX NL	PART NUMBER FBX LL	HUB NORMAL	HUB LONG	NYLON SLEEVE
FBX 14	00501402	00501400	00501404	00501420	00501440	00501410
FBX 19	00501902	00501900	00501904	00501920	00501940	00501910
FBX 24	00502402	00502400	00502404	00502420	00502440	00502410
FBX 28	00502802	00502800	00502804	00502820	00502840	00502810
FBX 32	00503202	00503200	00503204	00503220	00503240	00503210
FBX 38	00503802	00503800	00503804	00503820	005033840	00503810
FBX 42	00504202	00504200	00504204	00504220	00504240	00504210
FBX 48	00504802	00504800	00504804	00504820	00504840	00504810
FBX 55	00505502	00505500	00505504	00505520	00505540	00505510
FBX 65	00506502	00506500	00506504	00506520	00506540	00506510

MEASUREMENTS - WEIGHTS

COUPLING TYPE	hub without hole	Ød finished bore		measurement in mm									Kg		
				normal series							long	series	SLEEVE	HUB	HUB
		min.	max	B	C	ØD	E	ØF	G	M	L	S		normal	long
FBX 14	-	6	14	37	6,5	25	23	40	4	50	40	84	0,02	0,06	0,10
FBX 19	-	8	19	37	8,5	32	25	48	4	54	40	84	0,03	0,09	0,13
FBX 24	-	10	24	41	7,5	36	26	52	4	56	50	104	0,04	0,11	0,21
FBX 28	-	10	28	46	19	44	40	66	4	84	55	114	0,07	0,28	0,38
FBX 32	-	12	32	48	18	50	40	76	4	84	60	114	0,09	0,37	0,50
FBX 38	-	14	38	48	18	58	40	83	4	84	60	124	0,11	0,46	0,70
FBX 42	-	20	42	50	19	65	42	92	4	88	60	124	0,14	0,64	0,90
FBX 48	-	20	48	50	27	68	50	95	4	104	60	124	0,16	0,74	1,00
FBX 55	-	25	55	58	25	82	52	114	4	108	65	134	0,26	1,12	1,41
FBX 65	-	25	65	68	23	96	55	132	4	114	70	144	0,39	1,59	2,04

FBX **NN** FBX **NL** FBX **LL**

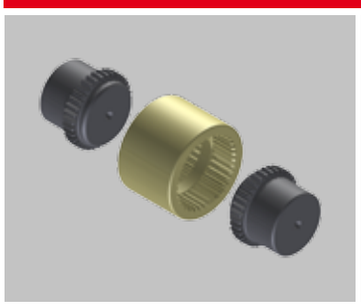
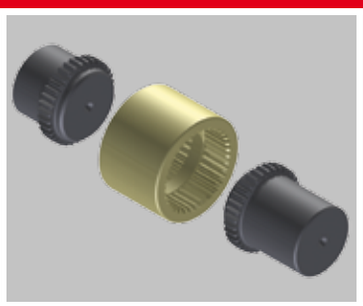
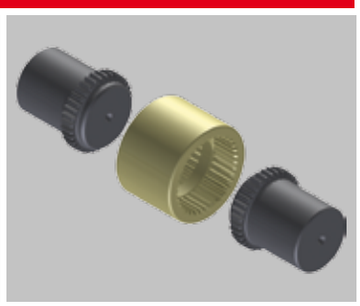


IMPORTANT
The FBX couplings can be ordered complete or for single items.

CAD drawings available on our site
www.chiaravalli.com

Quantity, availability and prices on B2B Chiaravalli